SMARTFLOOR

Mercedes Vito Front Module Drawer
Installation Manual

Manual nr 15016191 Rev 06
Loyds Industri AS 2020-09-21

Revision Record

Rev nr	Date	Page	Picture	Update	New	Deleted steps
02	29.01.2019			Floor Ext.		
03	08.08.2019			Changed Floor Kit		
04	08.10.2019			Norwegian marked only		

Recommended torque for screws:

4,2mm Selfdrilling:	3,6 NM
6mm:	6 NM
8mm:	10 NM
10mm:	42 NM

Tools

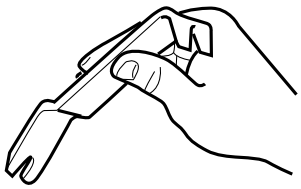	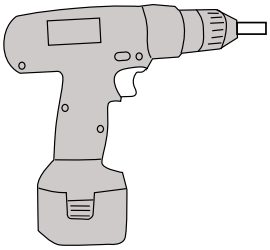	M6	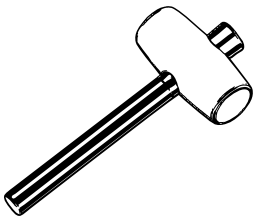
10, 13 mm 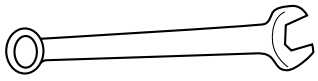	10, 13 mm 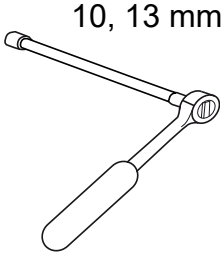	Bits T 25 T 30 T 40 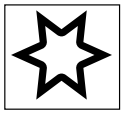 Bits PH2	

15015180_C Front Module Drawer Vito A2 Snookes SEP No 2SLD

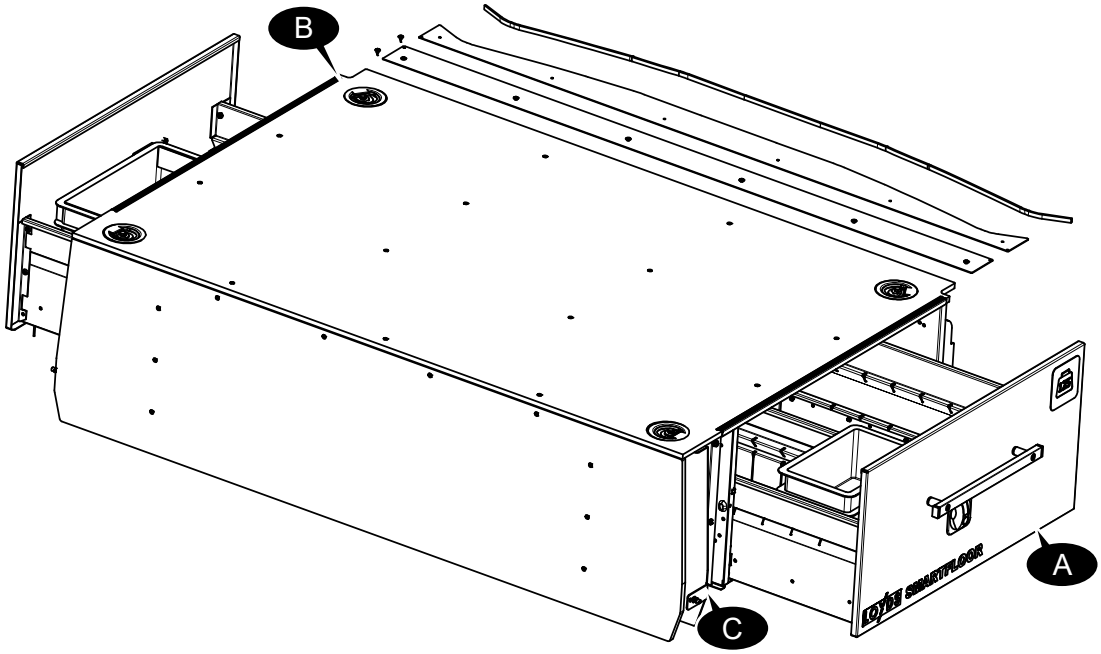

Item	Quantity	Part Number	Description
A	1	15009190	FD2 Front Drawer Complete ASSY
B	1	15017948	Floor Set SF F-Mod Drawer Vito LafiSno Sep 2SLD
C	1	15015176	Steel Bracket Set Front Mod Drawer Vito A2

15015185_C Front Module Drawer Vito A2 Snookes Sep No 1SLD

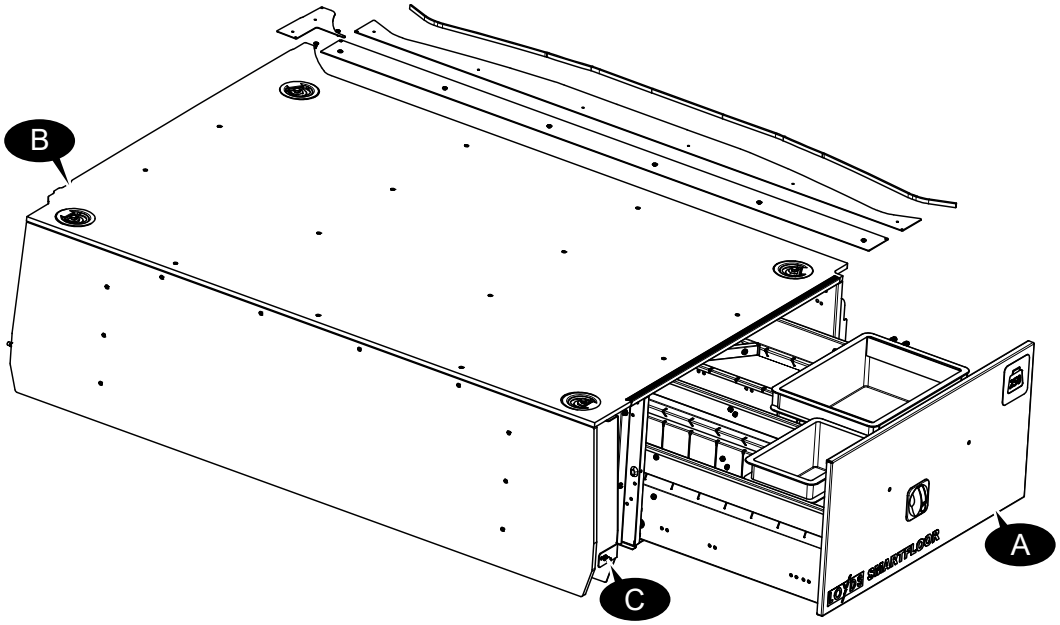

Item	Quantity	Part Number	Description
A	1	15009580	FD1 Front Drawer Complete Assy
B	1	15017947	Floor Set SF F-Mod Drawer Vito LafiSno Sep 1SLD
C	1	15015176	Steel Bracket Set Front Mod Drawer Vito A2

15017948_A Floor Set SF F-Mod Drawer Vito LafiSno Sep 2SLD

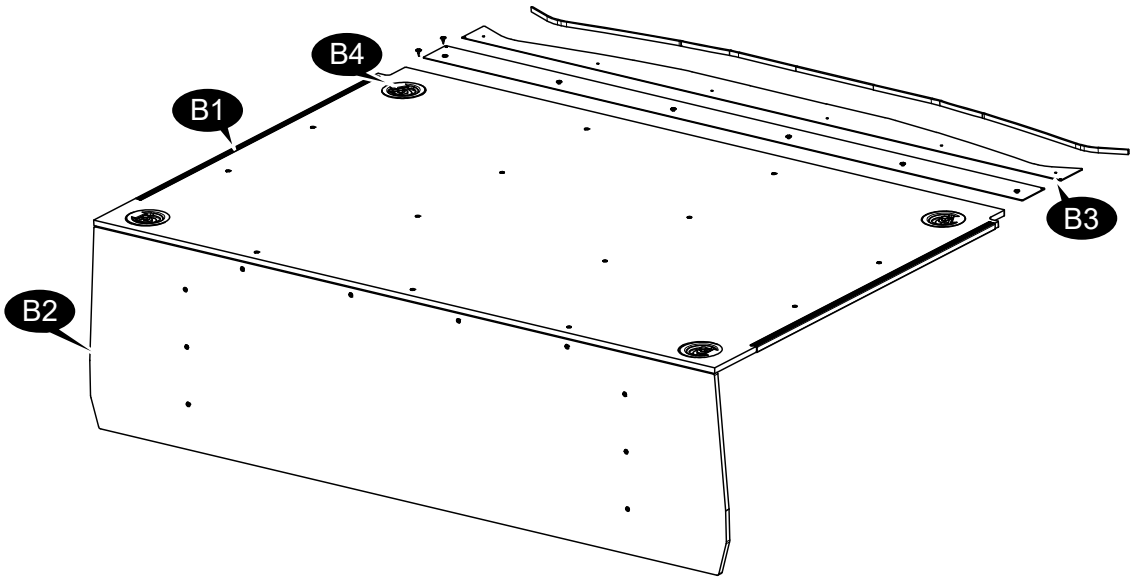

Item	Quantity	Part Number	Description
B1	1	15017944	Front Floor SF F-Mod Drawer Vito LafiSno Sep 2SLD ASSY
B2	1	15015182	Vertical Floor Front Mod Drawer Vito A2 2SLD
B3	1	15017953	Floor Extension Kit SF Vito LafiSno Sep 2SLD 2019
B4	1	15015177	Fitting Kit Floor Front Mod Drawer Vito A2

15017947_A Floor Set SF F-Mod Drawer Vito LafiSno Sep 1SLD

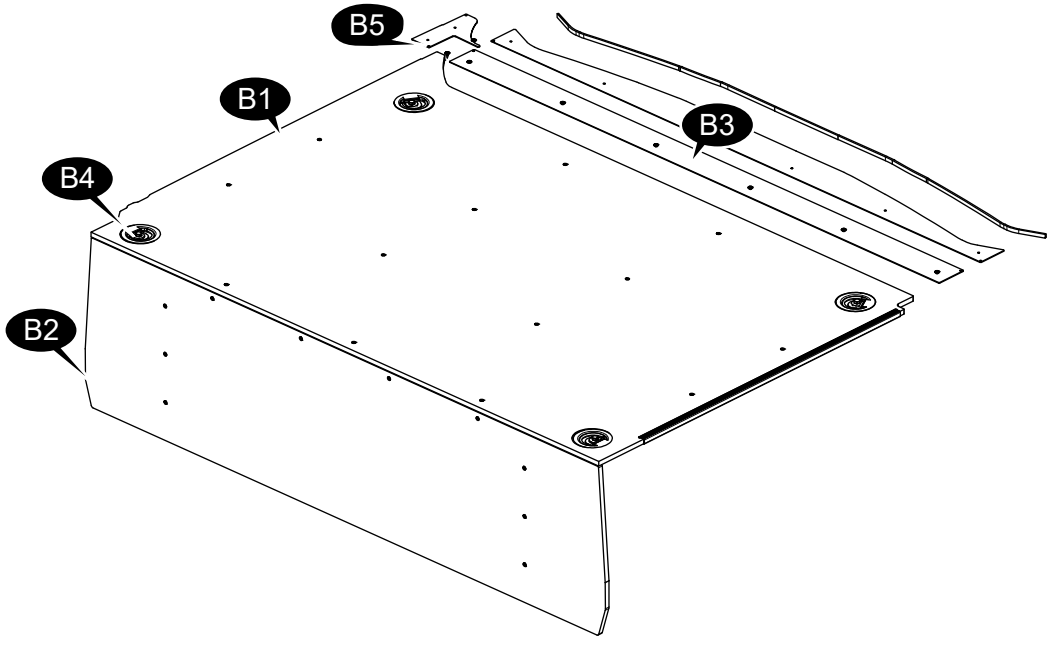

Item	Quantity	Part Number	Description
B1	1	15017943	Front Floor SF F-Mod Drawer Vito LafiSno Sep 1SLD ASSY
B2	1	15015182	Vertical Floor Front Mod Drawer Vito A2 2SLD
B3	1	15017953	Floor Extension Kit SF Vito LafiSno Sep 2SLD 2019
B4	1	15017957	Fitting Kit Floor Front Mod Drawer Vito A2
B5	1	15017957	Floor Extend Bracket SF Vito Lafinto Sep 2019 1SLD

15015176 Steel Bracket Set Front Mod Drawer Vito A2

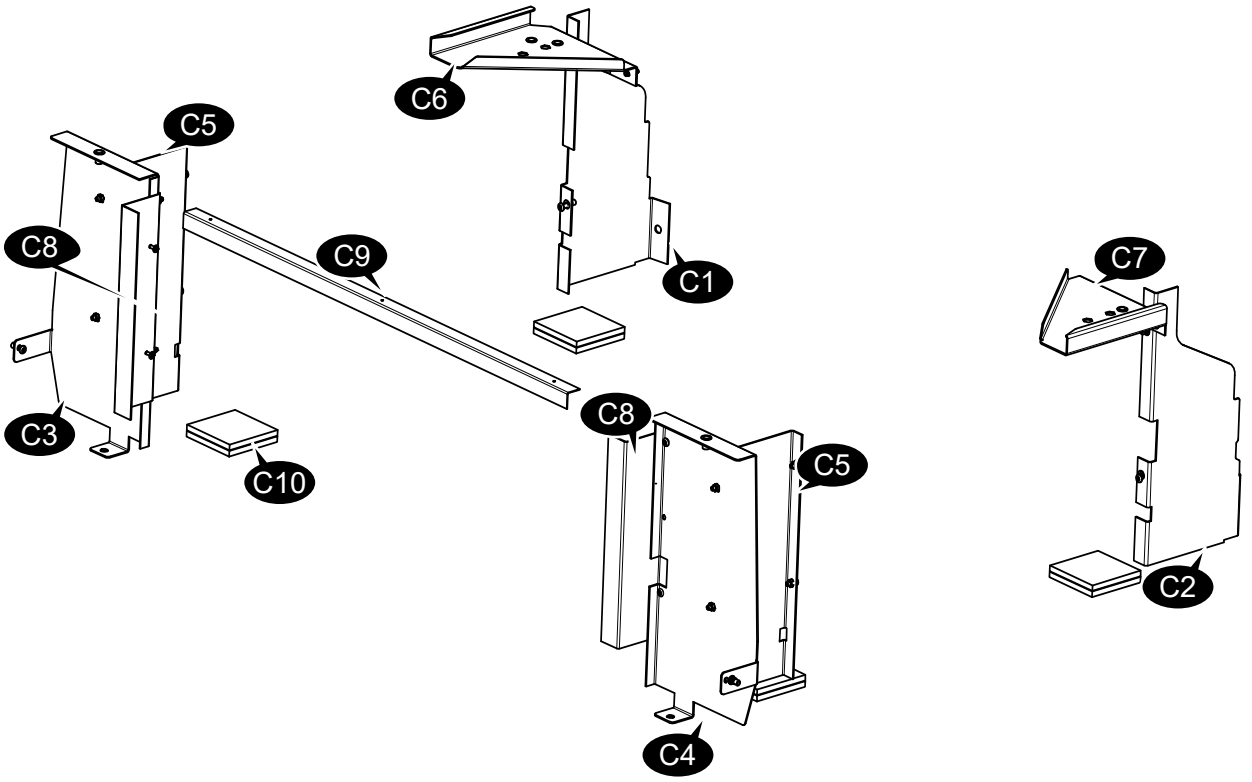

Item	Quantity	Part Number	Description
C1	1	15012335	Bracket Side Front Left Assy
C2	1	15012334	Bracket Side Front Right Assy
C3	1	15012330	Bracket Side Middle Left w Latch Assy
C4	1	15012331	Bracket Side Middle Right w Latch Assy
C5	2	15012319	Bracket Connect Front Rear Drawer
C6	1	15011032	Bracket Latchcup M8 Multi Left Assy
C7	1	15011031	Bracket Latchcup M8 Multi Right Assy
C8	2	15015181	Bracket Vertical Floor Front Mod Drawer Vito
C9	1	15012687	Angle Vertical Floor Rear Module Drawer
C10	1	15015178	Fitting Kit Steel Bracket Set Front Mod Drawer Vito A2

15010236 Handle Assy

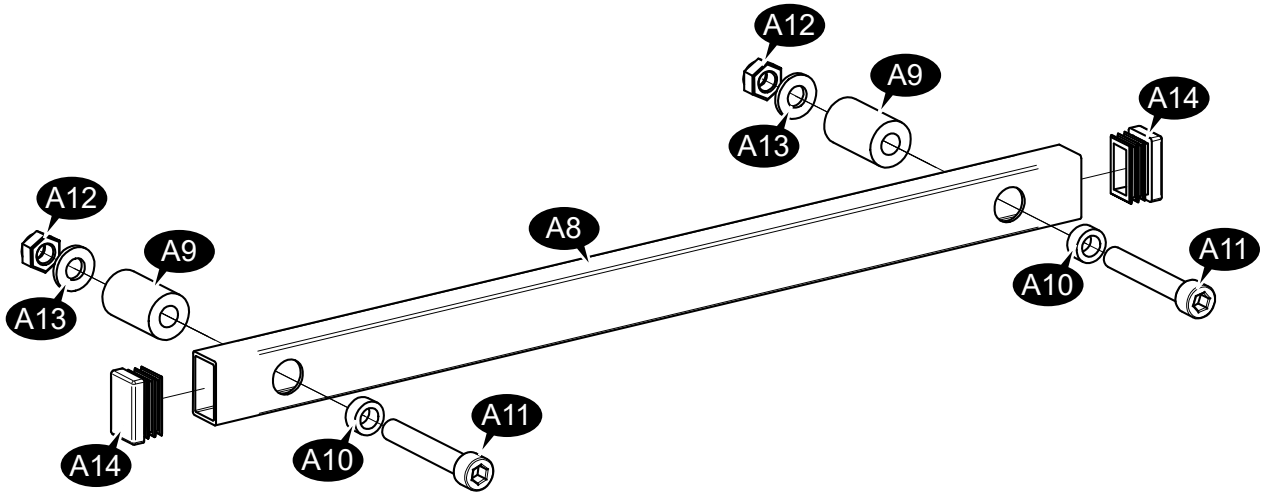

Item	Quantity	Part Number	Description
A8	1	15009441	Handle Tube 25x15x286
A9	2	15009442	Spacer Ø8,3x18x30 Nylon Black
A10	2	15009443	Spacer Ø8,1x13x6mm Galv
A11	2	15009444	Screw M8x50 Cylinderh Hex
A12	2	8 NMU	Mutter M8 Nyloc DIN985
A13	2	8,4x17x2	M8 Washer, DIN 125
A14	2	15009438	End Plug Tube 25x15 Inside

15017953_A Floor Extension Kit SF Vito LafiSno Sep 2SLD 19

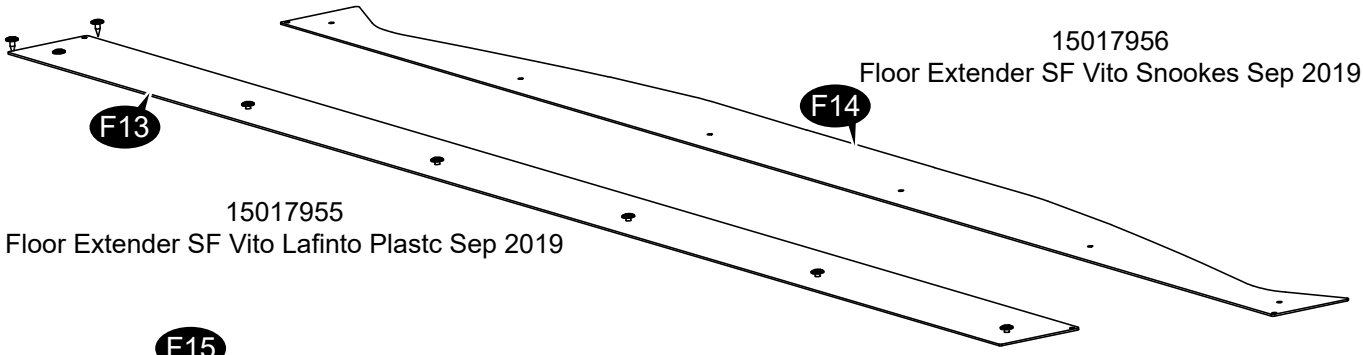

15017956
Floor Extender SF Vito Snookes Sep 2019

15017955
Floor Extender SF Vito Lafinto Plastc Sep 2019

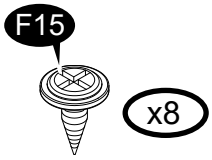

4,2x13 S
Screw 4,2x13 Flatheah Needle Black

15015178_A Fitting Kit Steel Bracket Set Front Drawer Vito A2

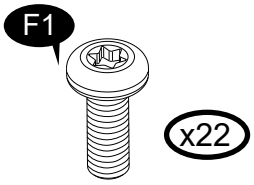

15003551
M6x16 TX30 pan (DIN 7985)

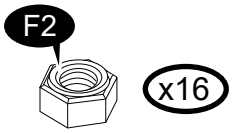

6 NMU
M6 Self Locking nut, DIN 985-8

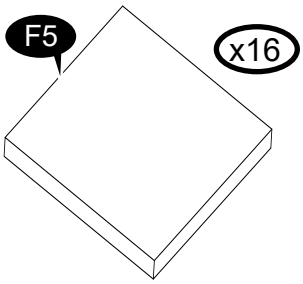

15017714
Wooden Spacer 9x100x100

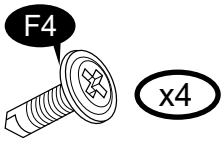

4,2x16 FLS
Screw Selfdrill flath elz

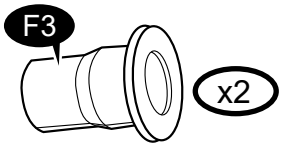

15003550
M6 Popnut short

15015177_A Fitting Kit Floor Front Mod Drawer Vito A2

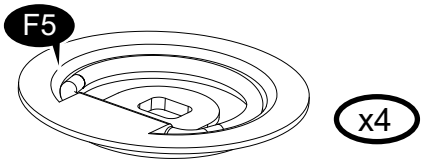

15005497
Latch Cup Black Ø90 Ø12x15 1000Kp

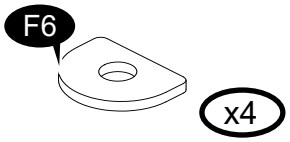

15005884
Washer Latchcup for Ø8

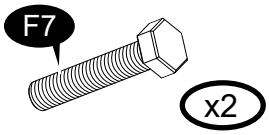

8x40 6KS
M8x40mm Bolt, DIN 933, sort

15004713
M8x50mm Bolt, 6K DIN 933 Black

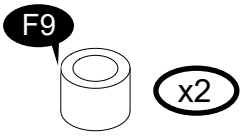

15001584
Distansehylse D20 d13 h15

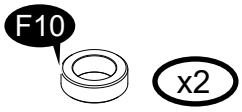

11,3x18x12
Distansehylse B-223 Plast

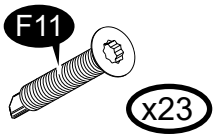

15009568
Screw 4,8x32 Selfdrill Counters Torx Elz

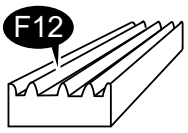

36.721004
Window rubber profile
L: 1600mm

1. *With Wood floor* L&R

2. *No Wood floor* L&R

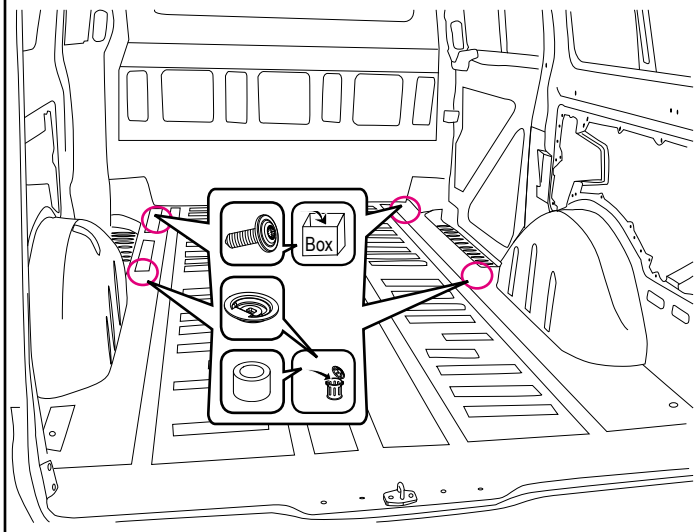

3. RH

4. LH

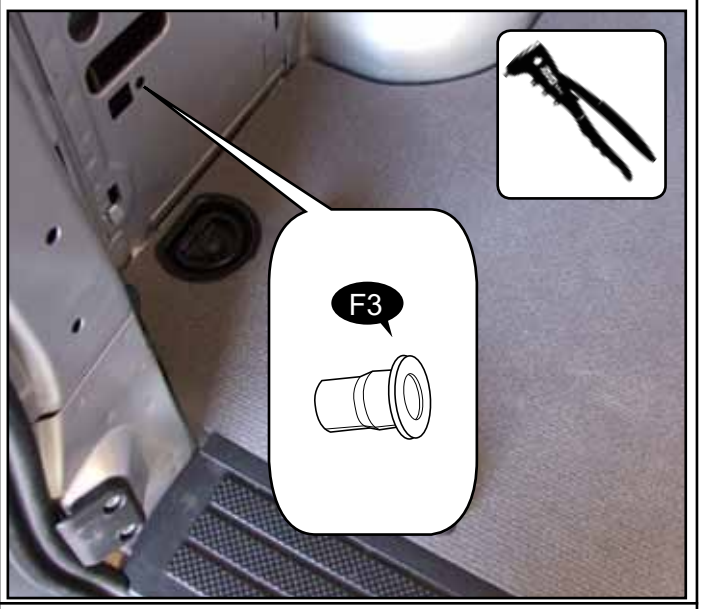

5. L&RH

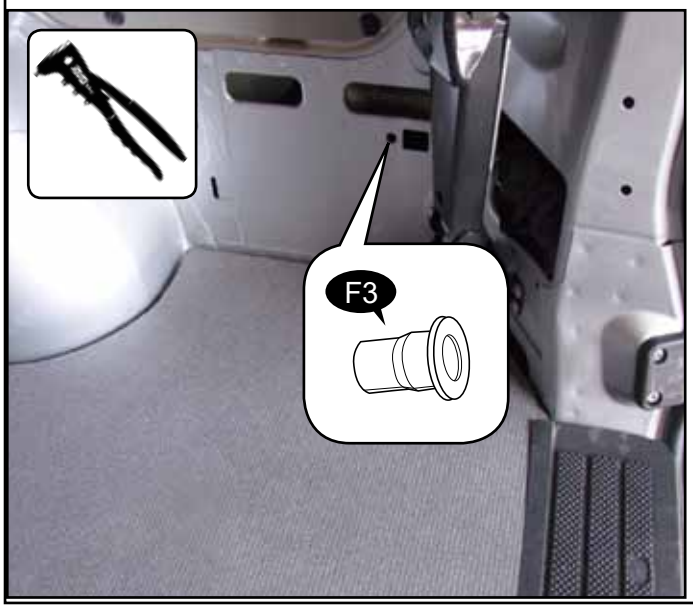

6. LH

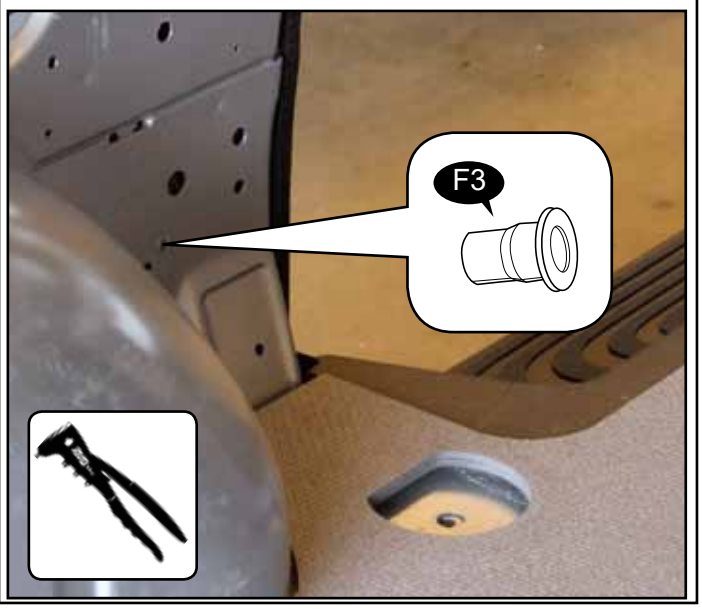

7. RH

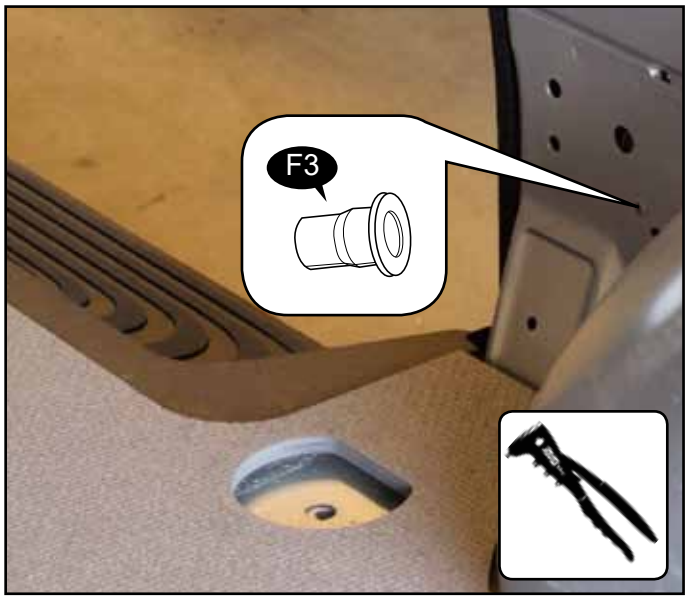

8.

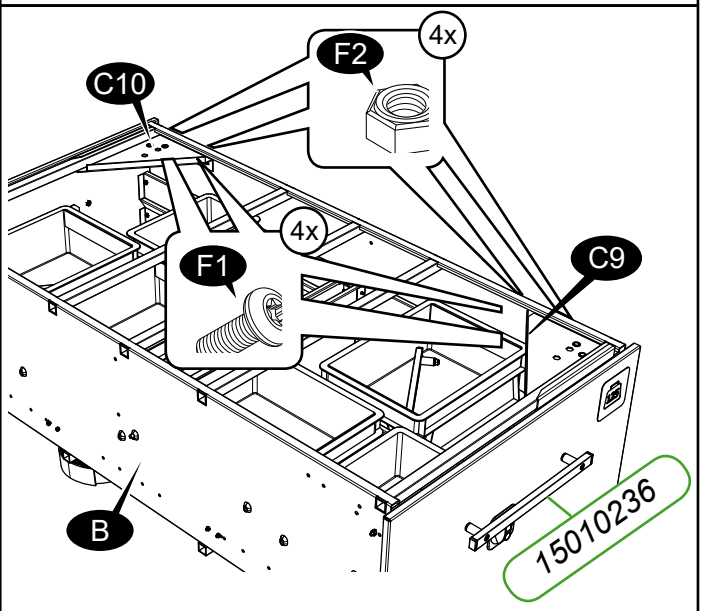

9. L&R

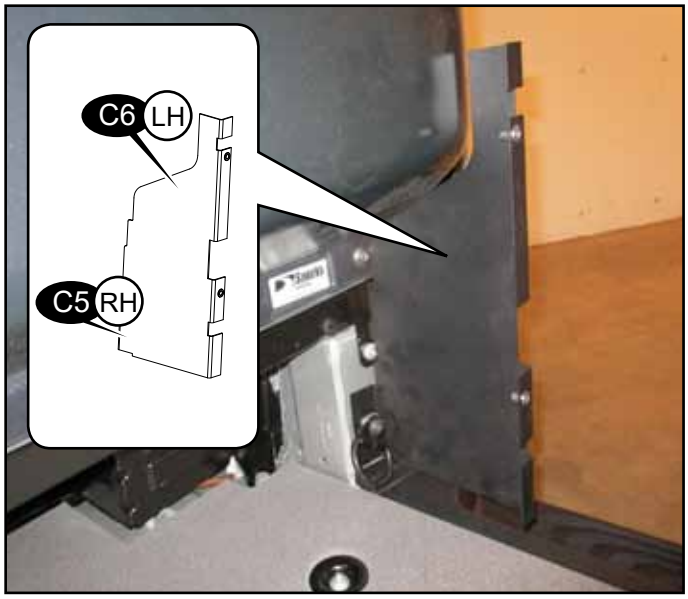

10. L&R

11. L&R

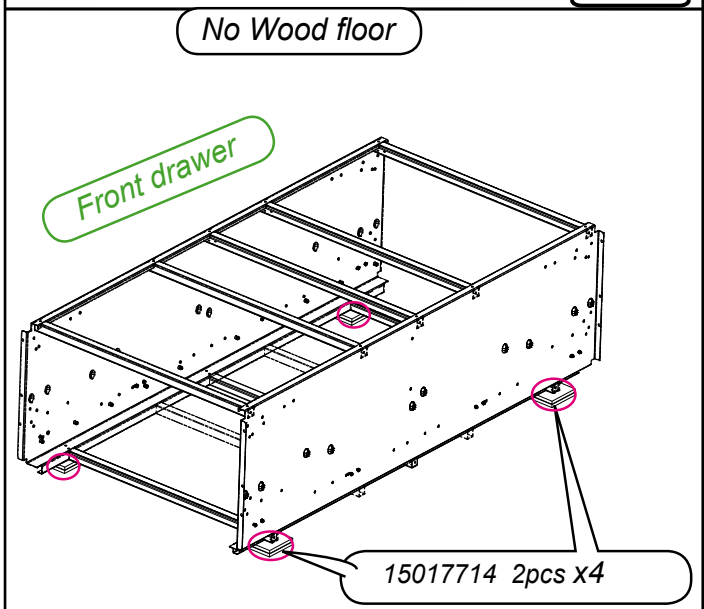

12. L&R

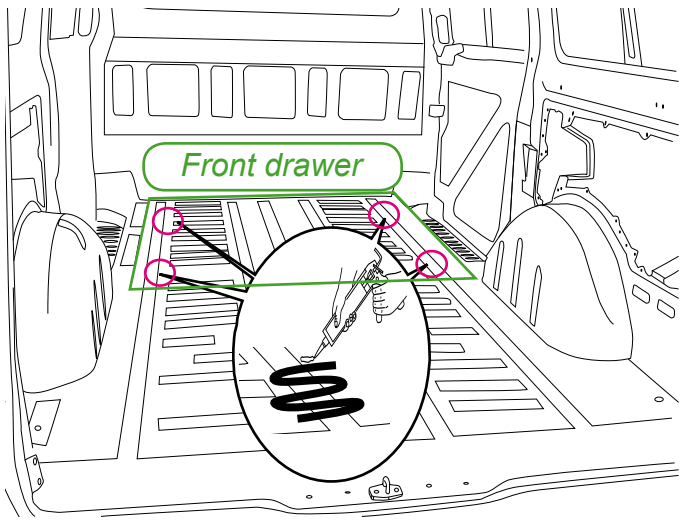

13.

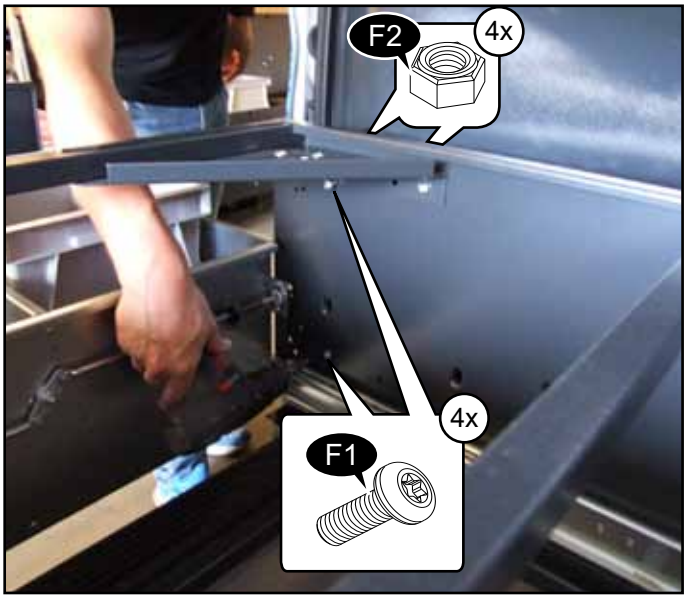

14. L&R

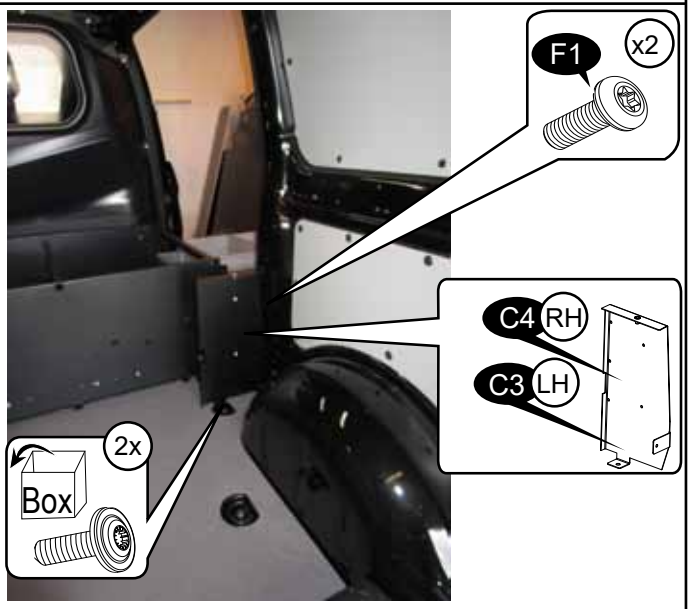

15. L&R

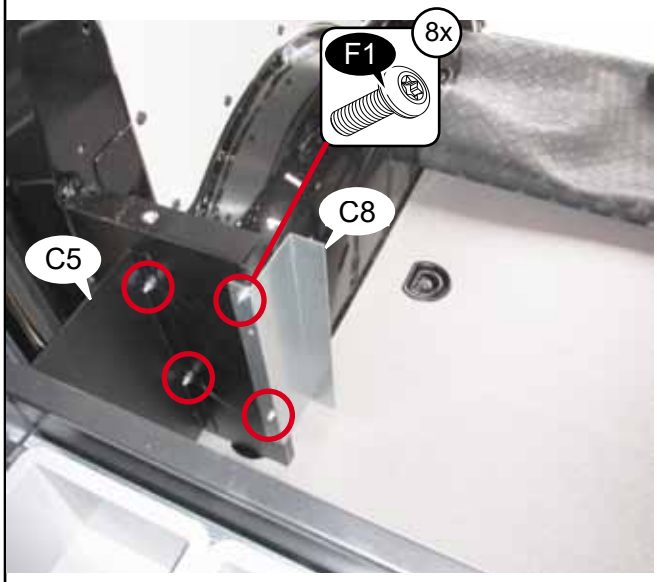

16. L&R

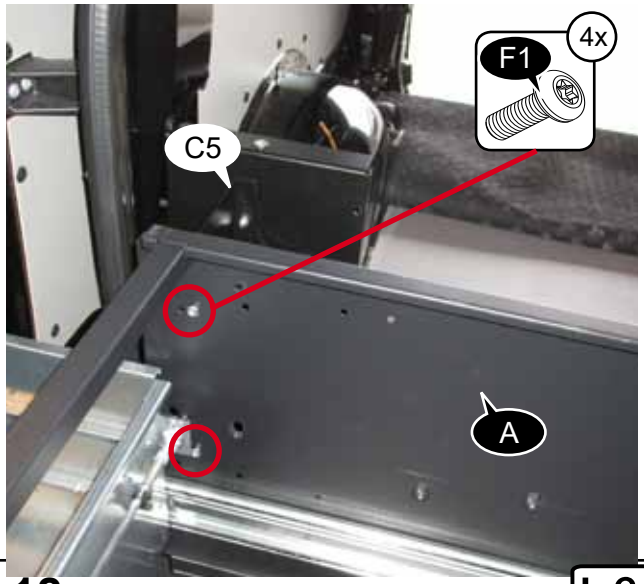

17. L&R

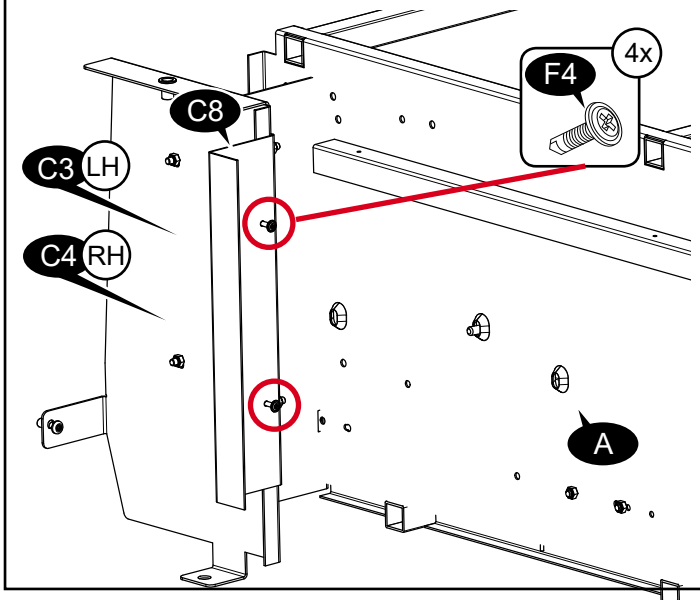

18. L&R

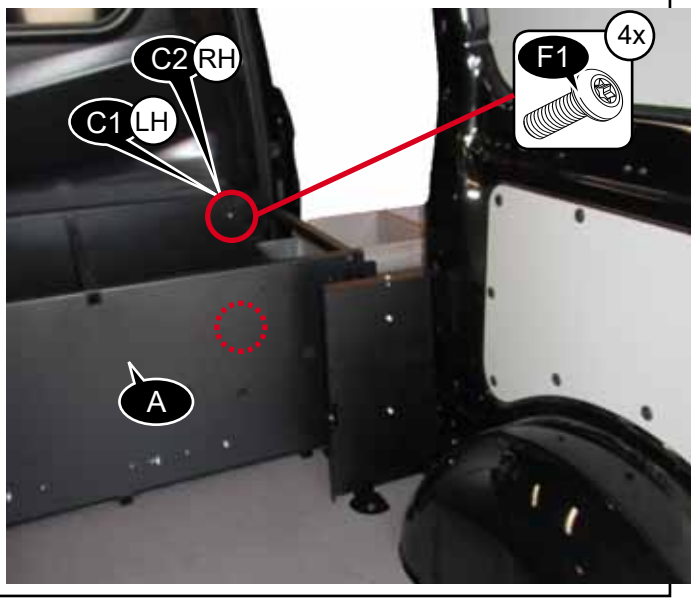

19. L&R

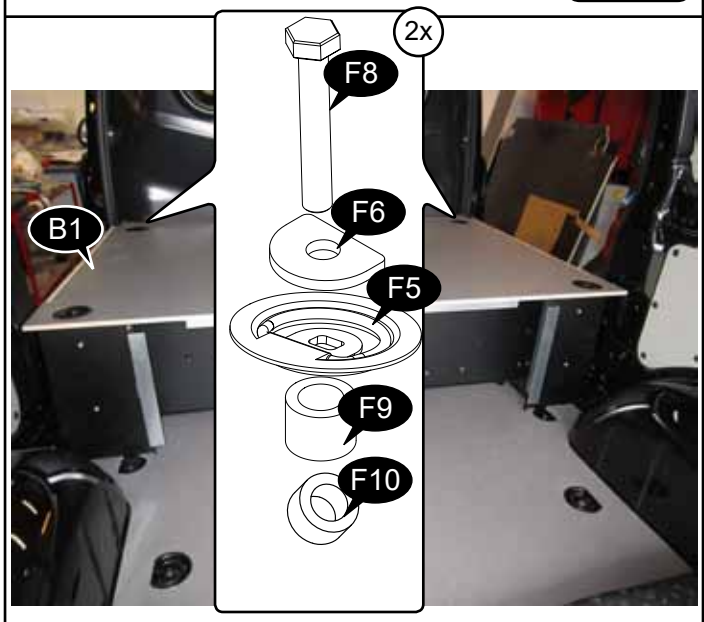

20. L&R

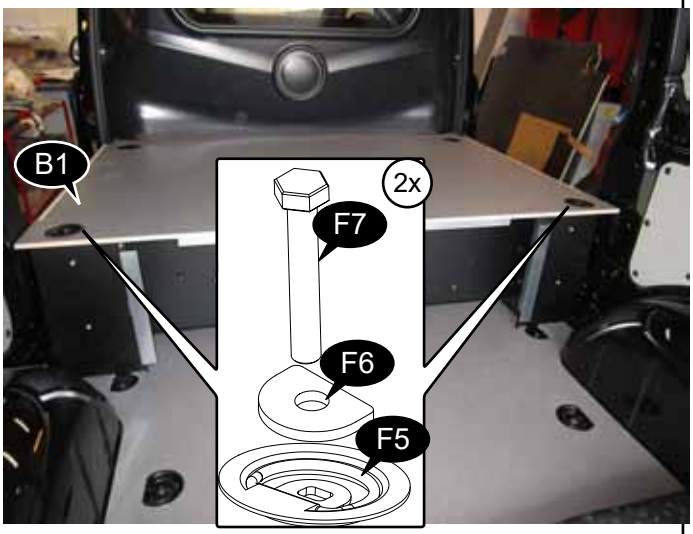

21.

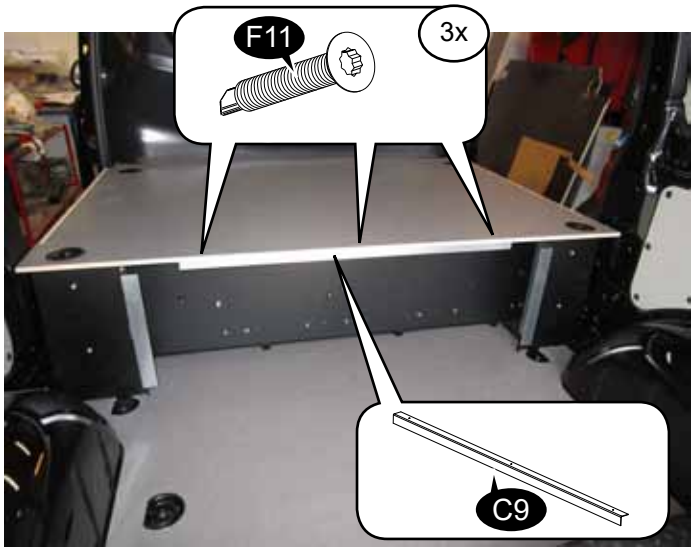

22.

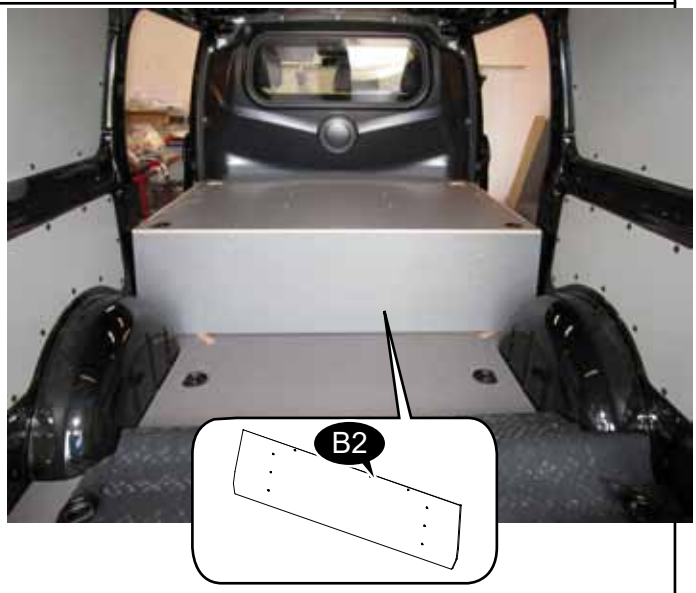

23.

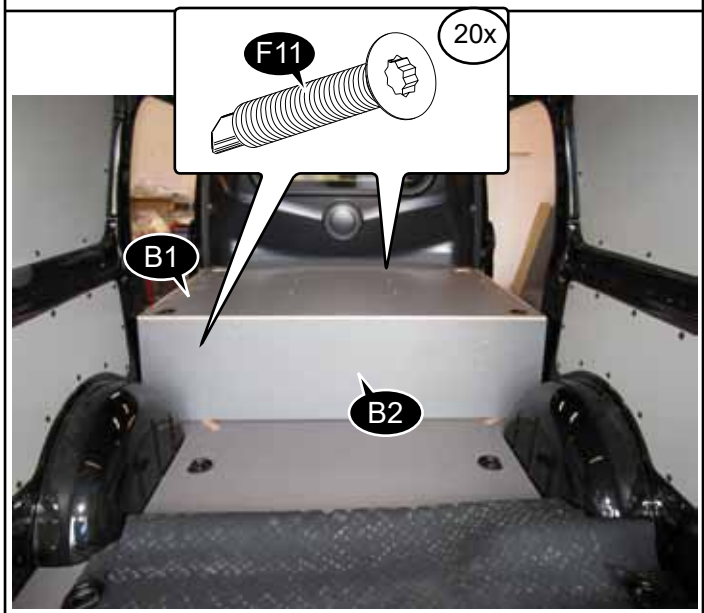

2SLD

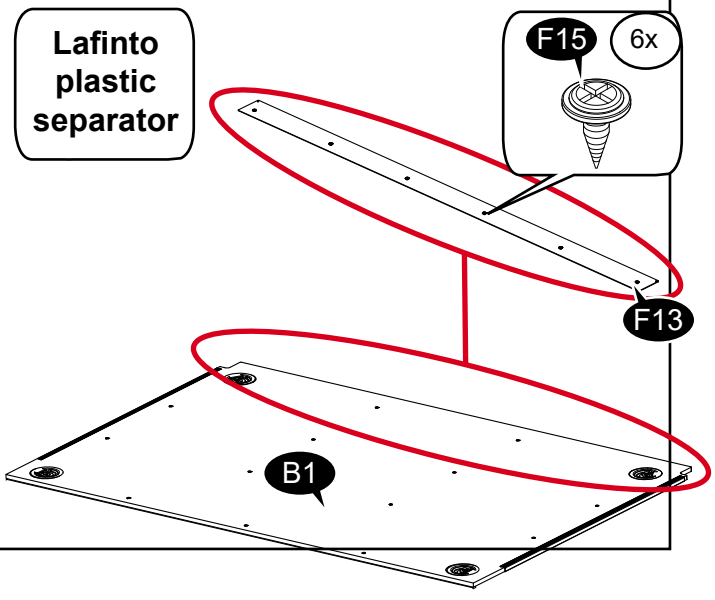

25.

2SLD

Snookes separator

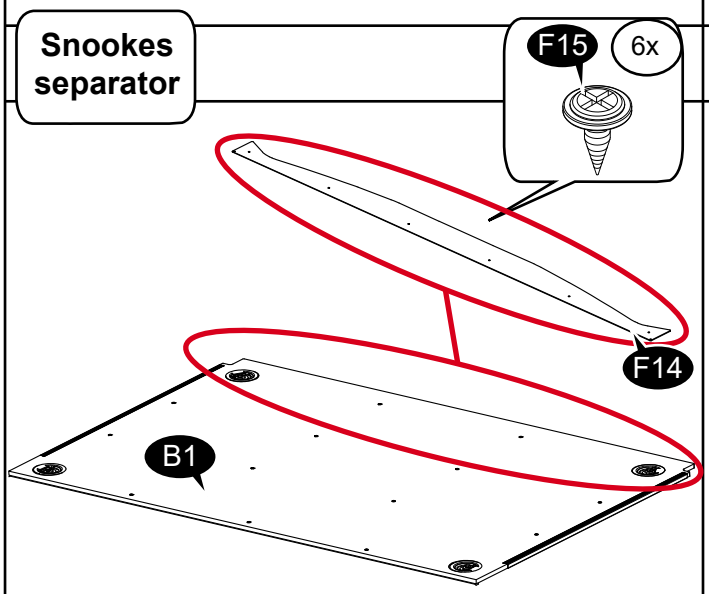

24.

1SLD

Lafinto plastic separator

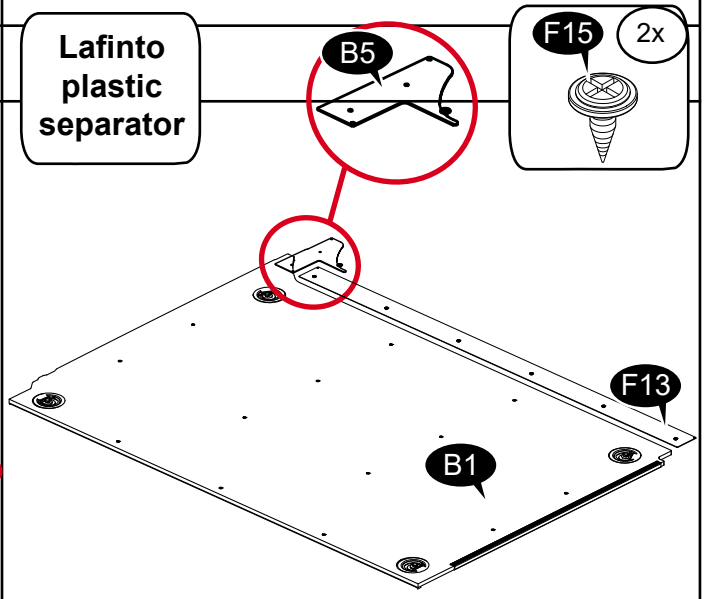
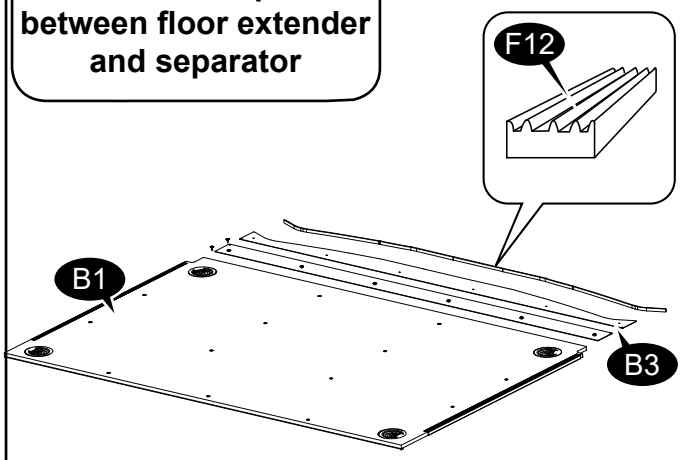
Mount rubber profile between floor extender and separator